NOTES		
A	MTL	6061 ALUMINUM
B	TOL.	±.10mm UNLESS NOTED
C	CNC	STANDARD MANUF. TOL. ACCEPTABLE - NO INSPECTION NECESSARY

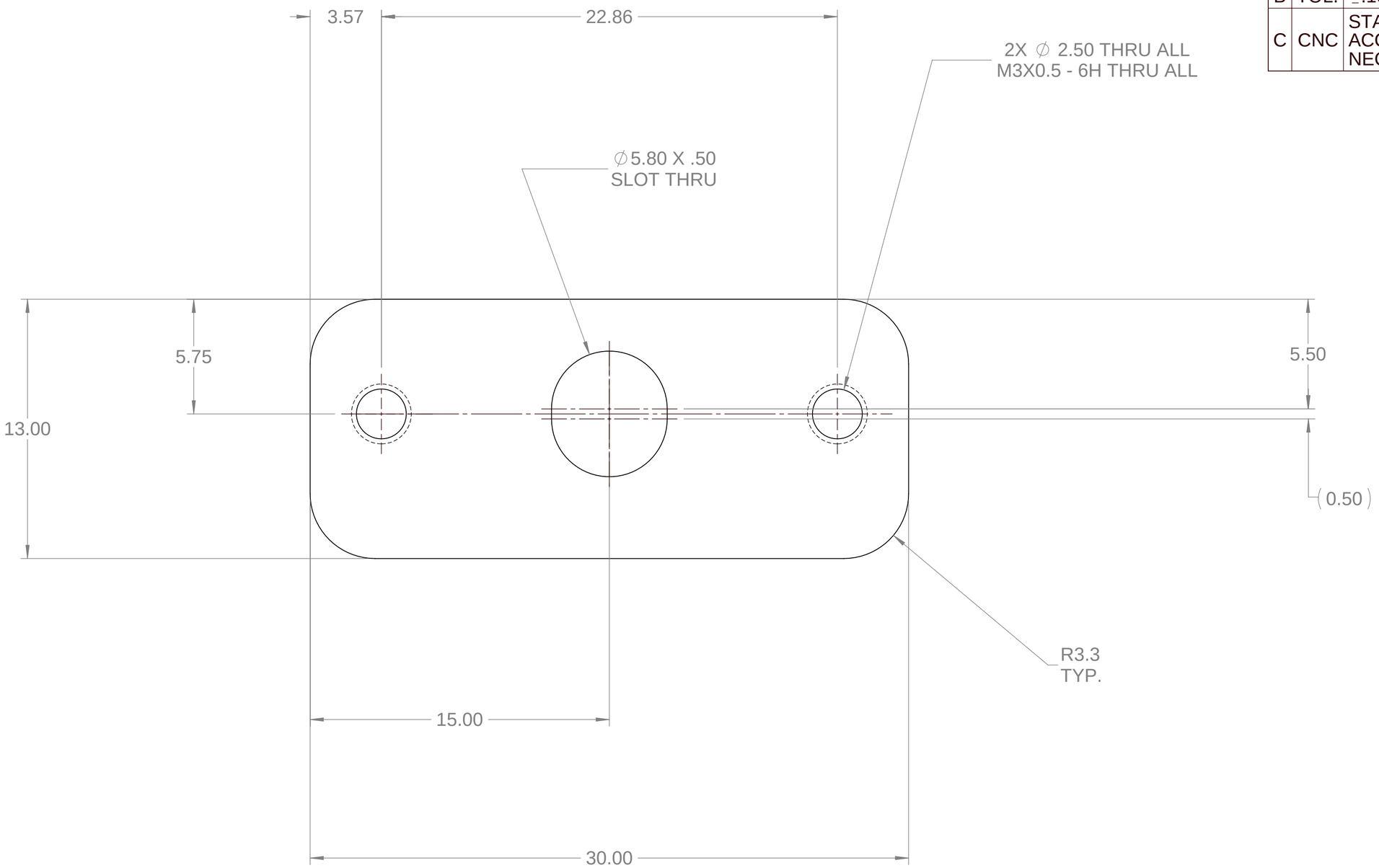

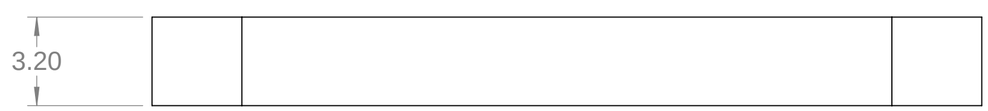

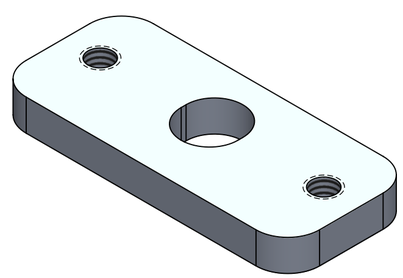

SHEET SCALE: 5:1

2D AND 3D CAD GEOMETRY AVAILABLE UPON REQUEST.
DIMENSIONS AND TOLERANCES COMPLY WITH *ASME Y14.5-2009.*

Wolfspeed®
535 W. Research Center
Fayetteville, AR 72701
(866) 924-3645
www.wolfspeed.com

mm / deg

SIZE C

THIRD ANGLE PROJECTION

RELEASE STATUS:

WOLFSPEED CONFIDENTIAL

This document and the information contained within are the proprietary and confidential information of Wolfspeed, Inc. This document may not be copied, reproduced, or disclosed to any unauthorized person without prior written consent of Wolfspeed, Inc.

RELEASE DATE:

CRITICAL TO QUALITY
SPECIAL CHARACTERISTICS REQUIRING CPK > 1.67 AND CONTINUOUS STATISTICAL PROCESS CONTROL (SPC) MONITORING

SIGNIFICANT FEATURE
SIGNIFICANT FEATURE, DIMENSION, OR CHARACTERISTIC WHICH MAY BE REFERRED TO BY THE ITEM NUMBER OR NOTE LETTER

è

SHEET 1 OF 1

PART #:

REV ¢

TITLE
XM3 PCB STANDOFF