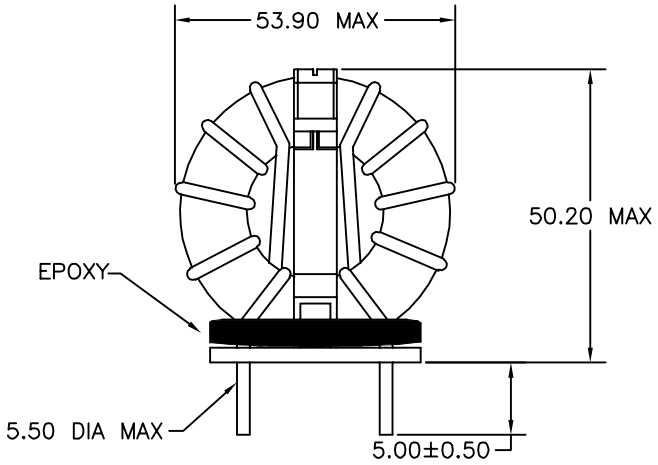

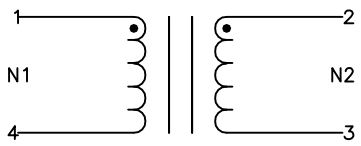

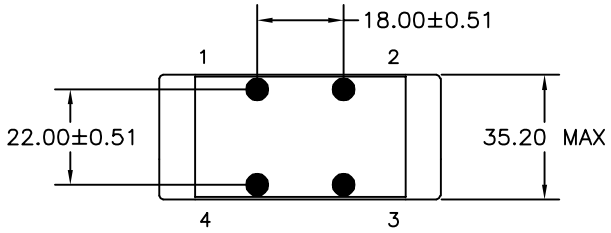

BOTTOM VIEW

ELECTRICAL SPECIFICATIONS

L @ 1kHz .25V – (1–4) 5.00mH ±30%

L @ 10kHz .25V – (1–4) 3.91mH TYP

L @ 40kHz .25V – (1–4) 1.60mH TYP

L @ 80kHz .25V – (1–4) 863µH TYP

L @ 100kHz .25V – (1–4) 717µH TYP

L @ 1MHz .25V – (1–4) 108µH TYP

TURNS RATIO – ±3%
N1:N2 – 1:1

DCR – MILLIOHMS MAX
1–4 – 1.08
2–3 – 1.08

HIPOT – 1500VAC 3SECS
N1 TO N2

CUSTOMER APPROVAL

Signature

Print or Type Name

Date

RoHS COMPLIANT

REVISION		DATE
A	RELEASED	02/13/18
B	UPDATED THE DCR'S	03/21/18
C	UPDATED LEAD AND L SPECS	04/27/18

MARKINGS LOCATION

DESCRIPTION
COMMON–MODE CHOKE

TOLERANCE UNLESS OTHERWISE SPECIFIED
2 PLACE DECIMALS ±.010
3 PLACE DECIMALS ±.005
FRACTIONS ±1/64
ANGLES ±1/2°

PROPRIETARY INFORMATION
PROPERTY OF
CRAMER COIL & TRANSFORMER CO.
DUPLICATION AND/OR DISTRIBUTION
BY PERMISSION ONLY

CUSTOMER
WOLFSPEED

Cramer Coil & Transformer Co.,

G:\DATA\SPECS\ENG\T\46592

DR. NJW	DATE 02/13/18	CUSTOMER PART NUMBER	REV
APPD. MJA	DATE 02/14/18	CRAMER PART NUMBER T46592	REV C